80522 Console Elite

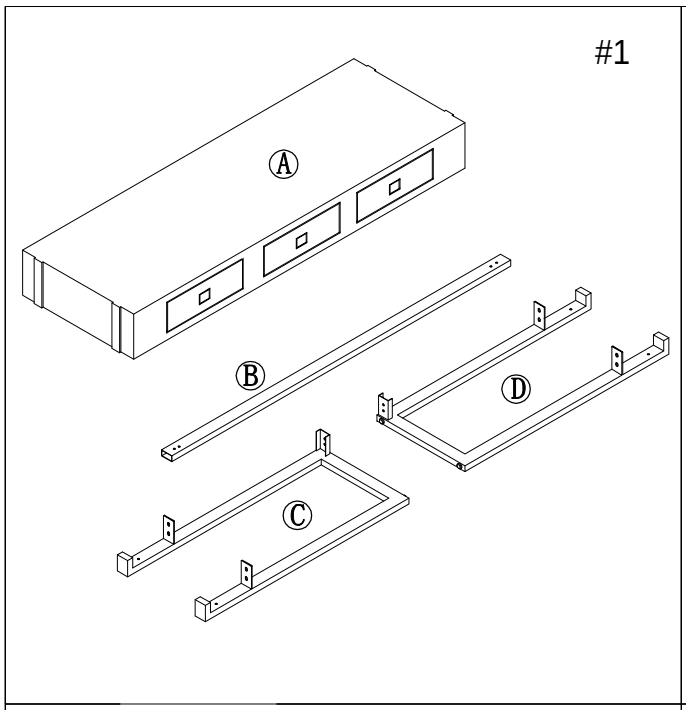

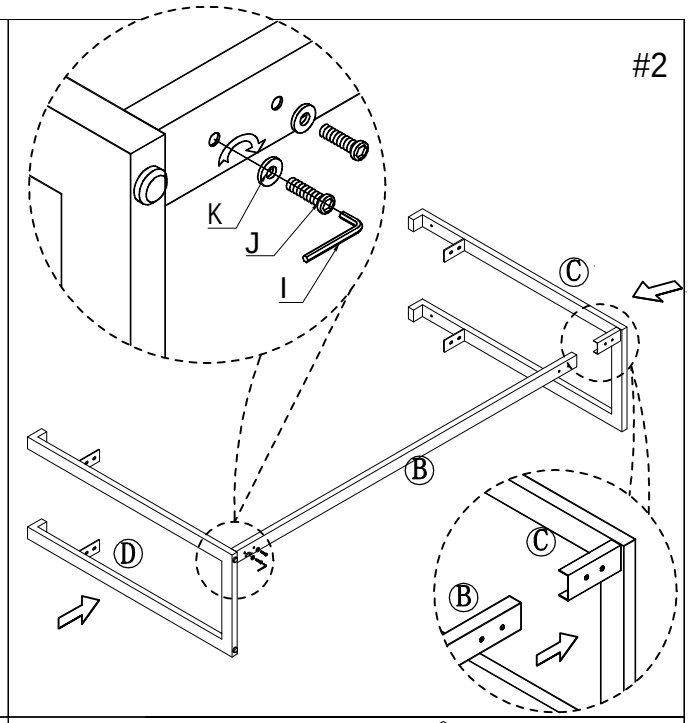

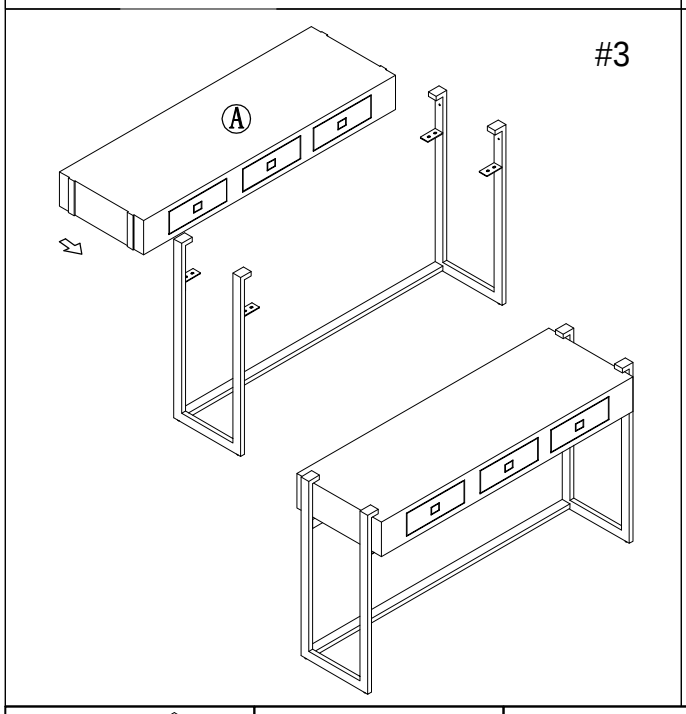

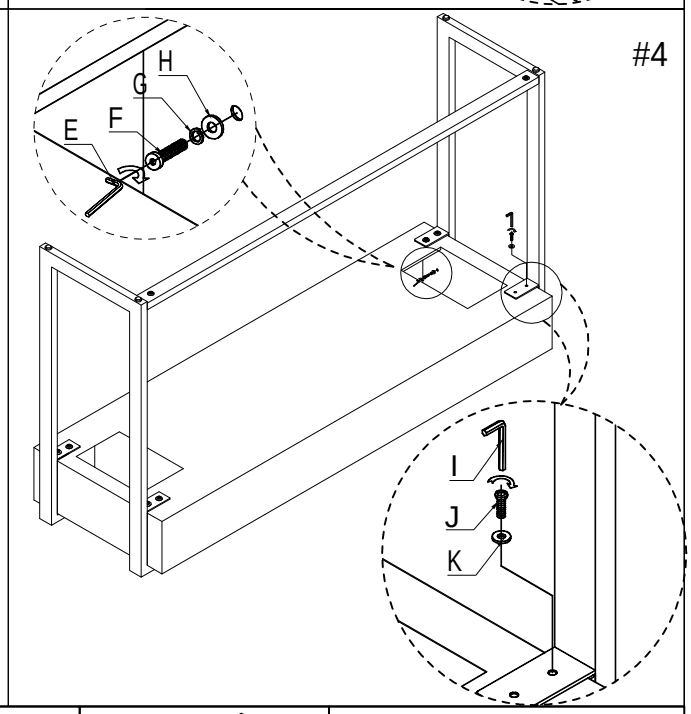

A 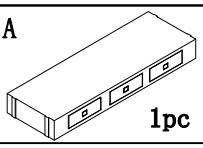 1pc	B 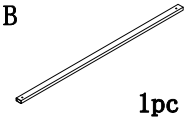 1pc	C 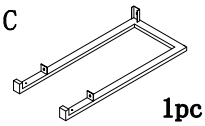 1pc	D 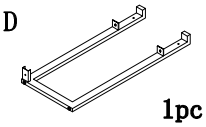 1pc	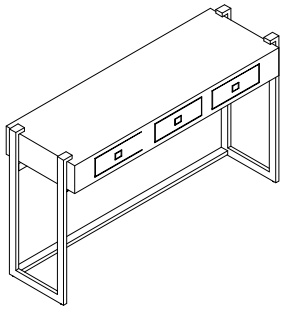
E 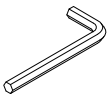 1pc	F  4pcs	G 4pcs	H  4pcs	
I  1pc	J  12pcs	K  12pcs		