85188 Coffee Table Noblesse
Rectangular 140x76

KARE DESIGN

(1)x1 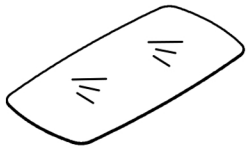	(6)x1 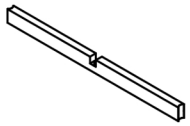
(2)x1	(7)x10
(3)x1	(8)x1
(4)x2	(9)x4
(5)x1 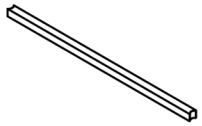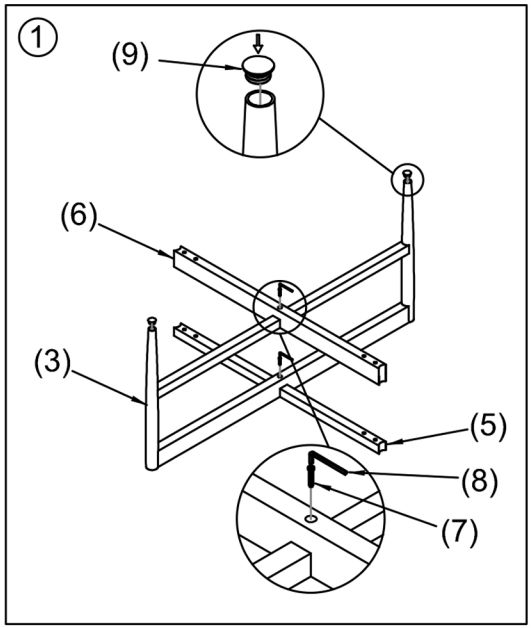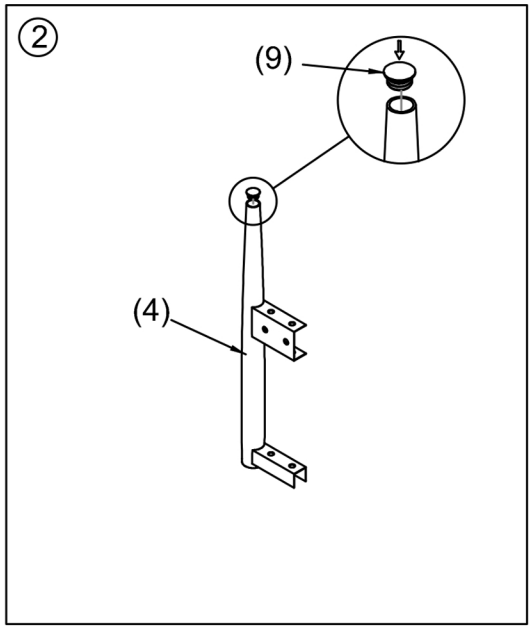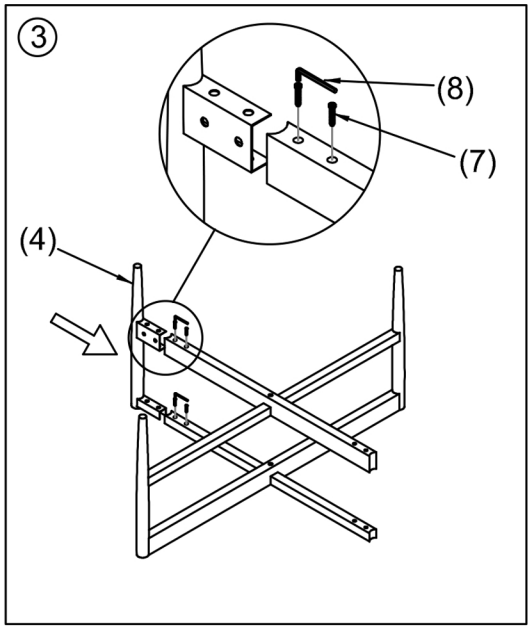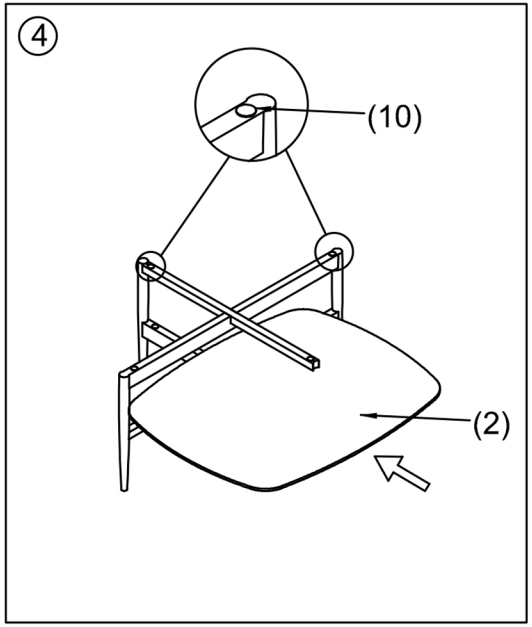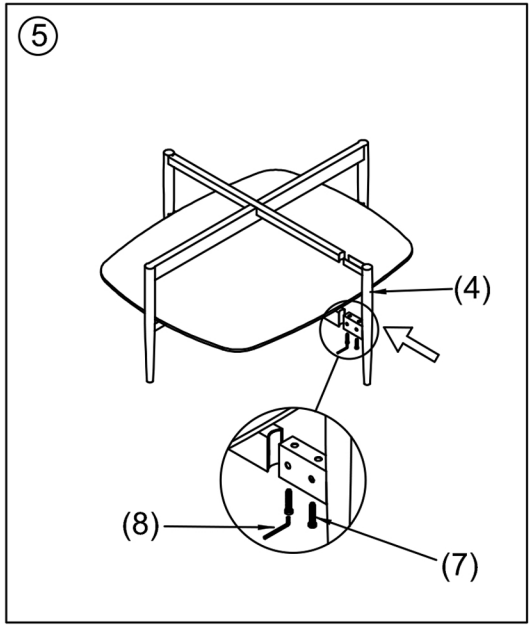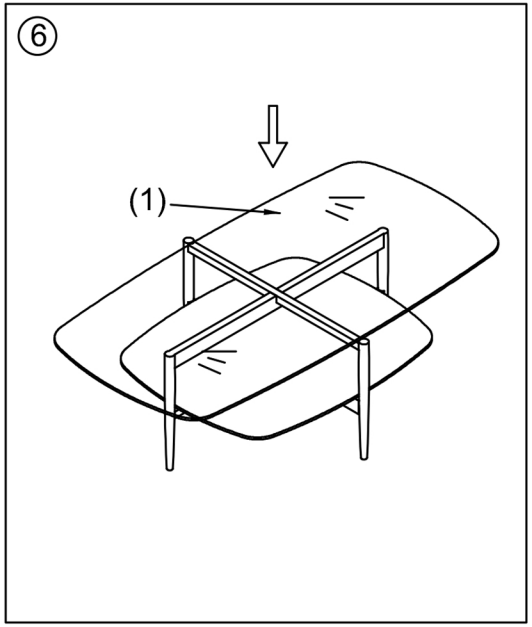	(10)x8