51312 Floor Lamp Swing Jazz Ova

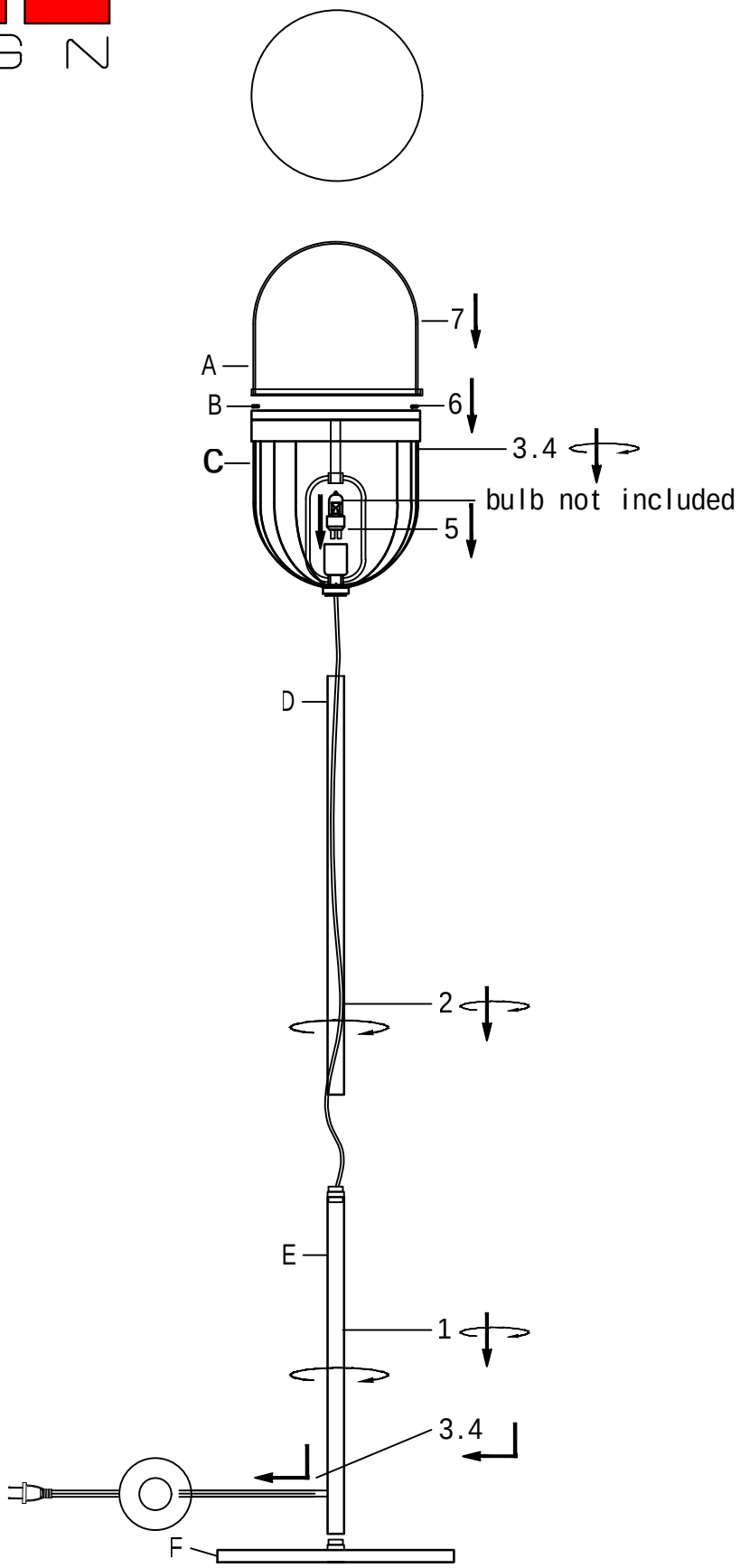

NO	A	B	C	D	E	F
TYPE						
QTY	1 PCS	1 PCS	1 PCS	1 PCS	1 PCS	1 PCS