KARE DESIGN

60631 Floor Lamp Five Fingers Brass

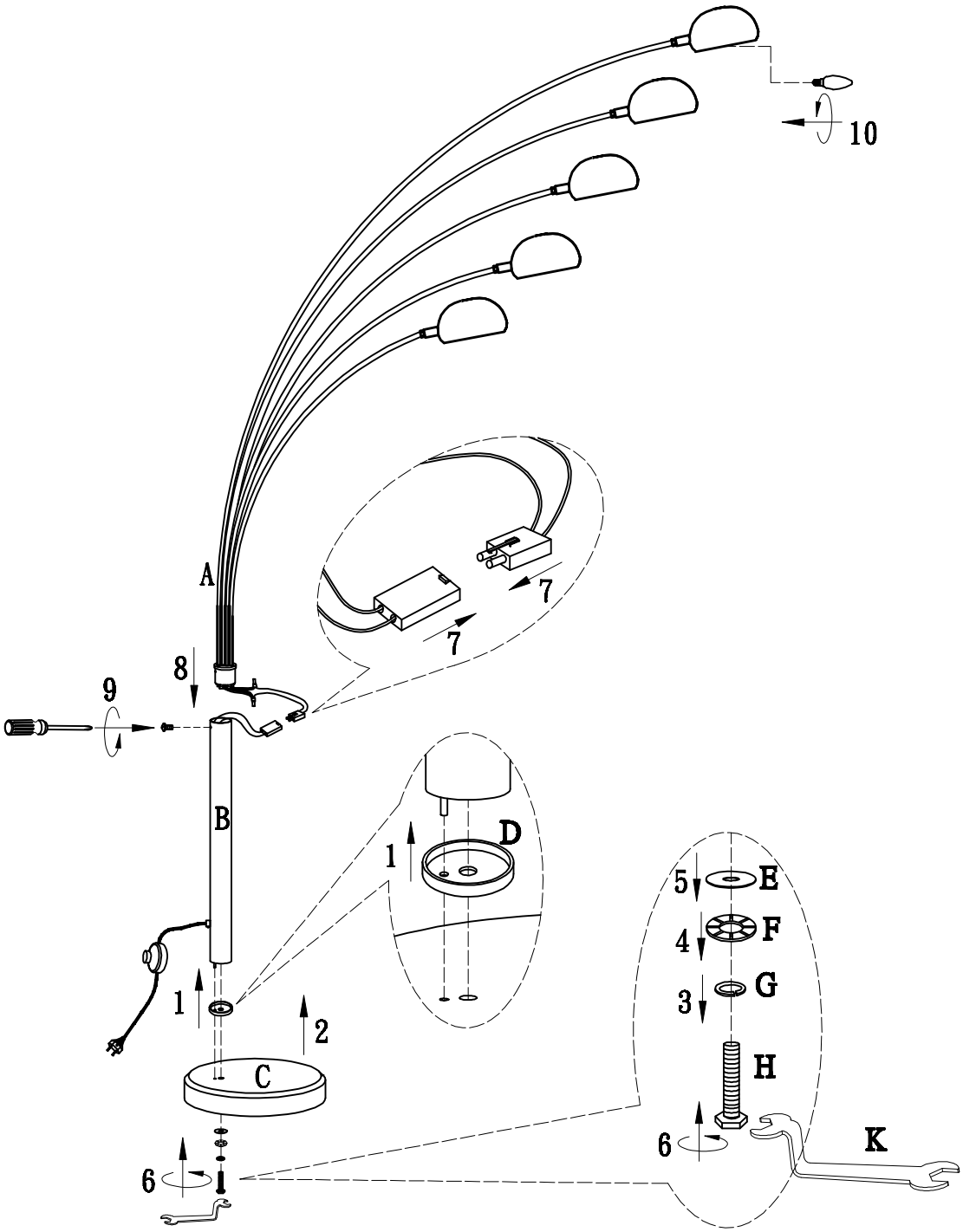

NO	A	B	C	D	E	F	G	H	K
TYPE									
QTY	1 PC	1 PC	1 PC	1 PC	1 PC	1 PC	1 PC	1 PC	1 PC