80743 CABINET 4 DOORS .SEATTLE

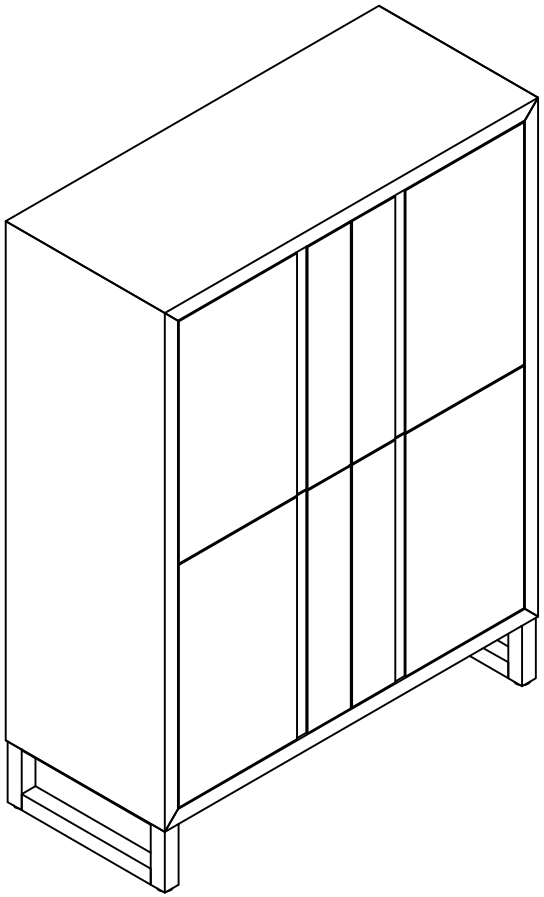

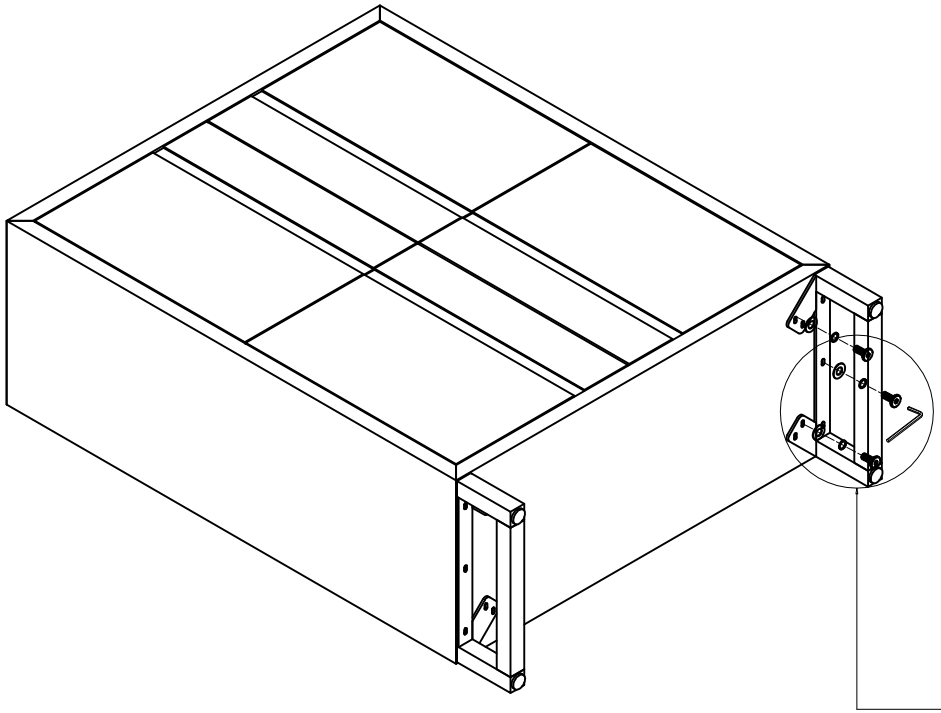

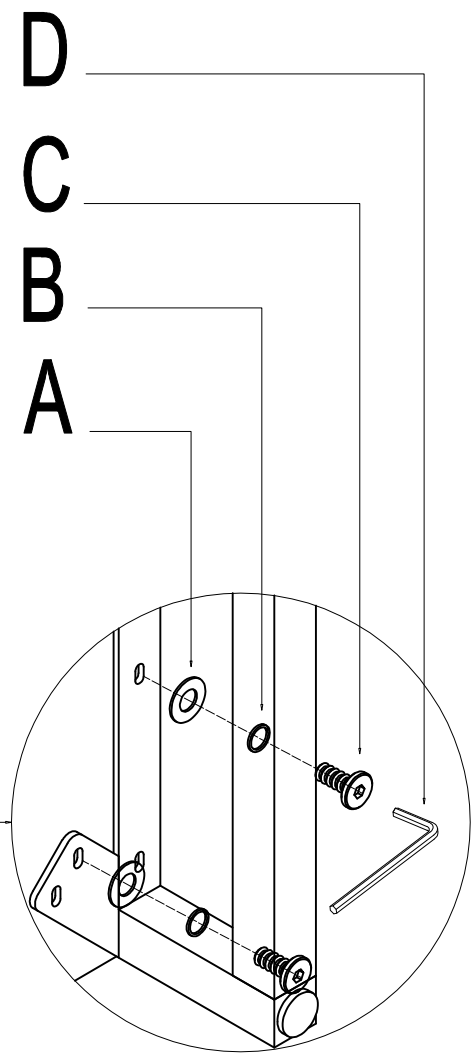
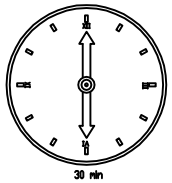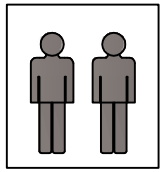
A		14 PCS
B		14 PCS
C		14 PCS
D		1 PCS