81184 HIGHBOARD 2 DOORS & 2 DRAWERS .LA BOCCA

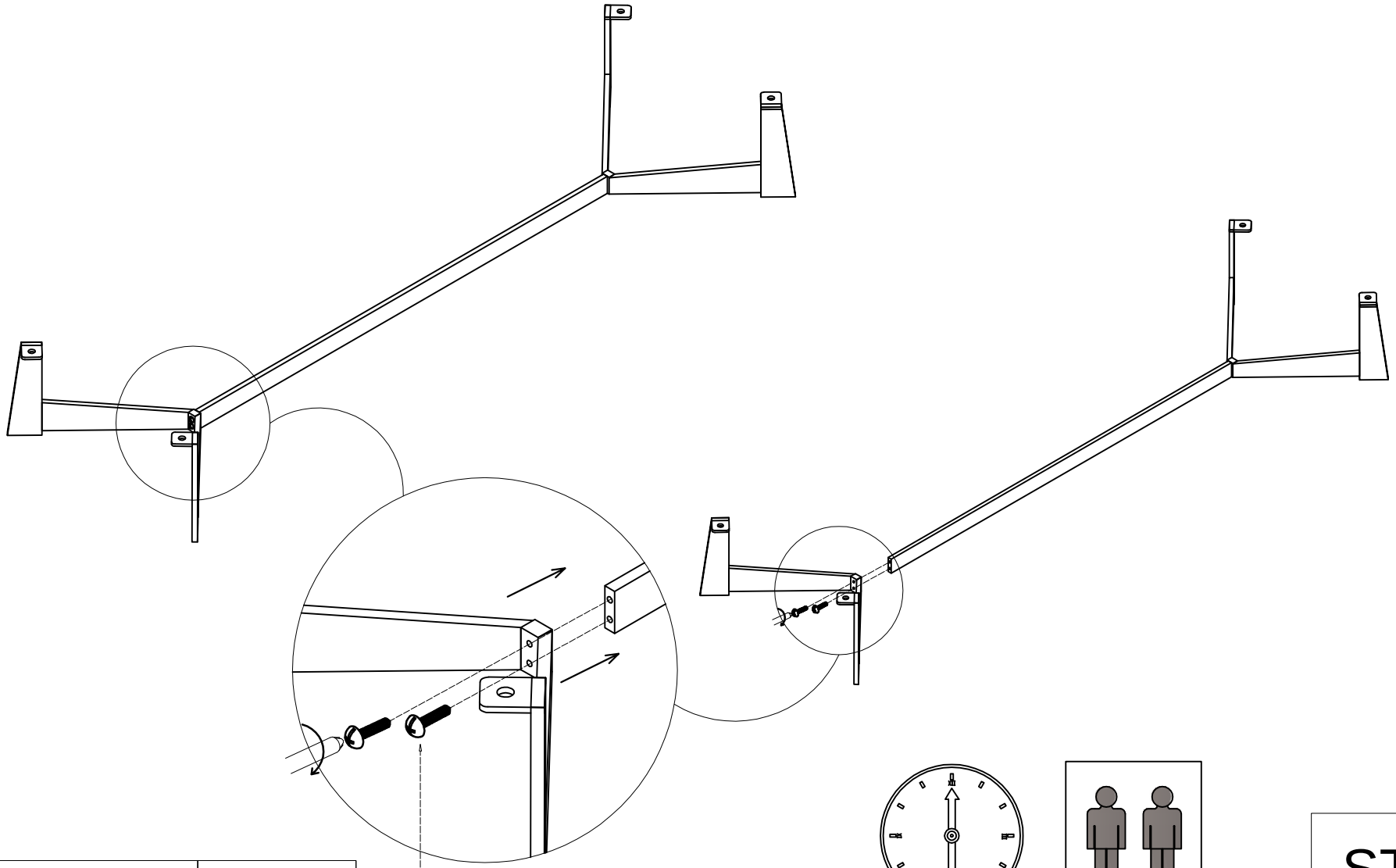

E	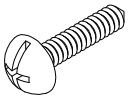	4 PCS

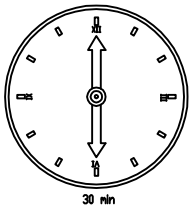

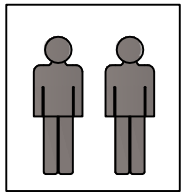

STEP 1

81184 HIGHBOARD 2 DOORS & 2 DRAWERS .LA BOCCA

KARE DESIGN

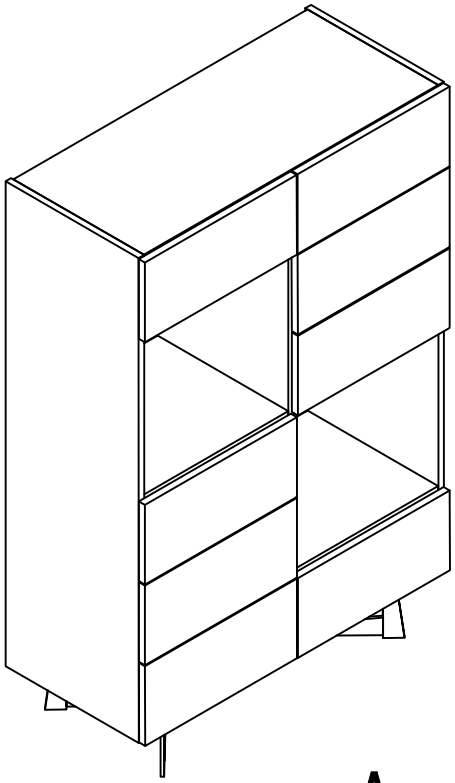

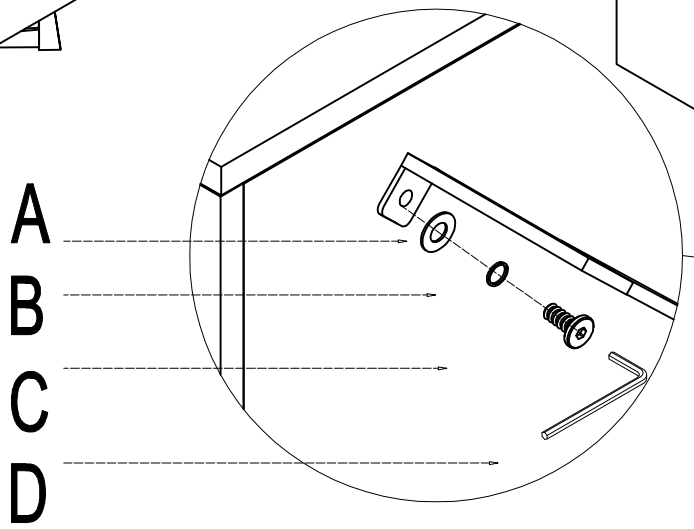

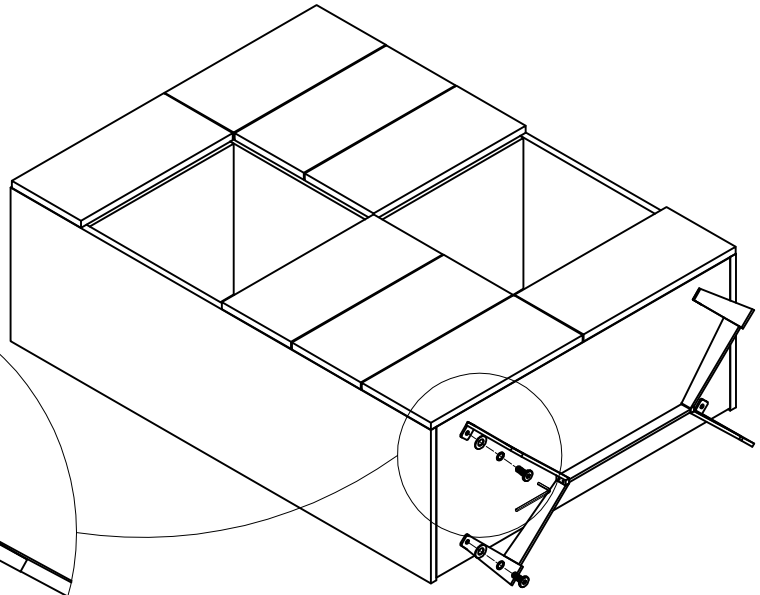

A		4 PCS
B		4 PCS
C		4 PCS
D		1 PCS

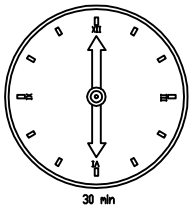

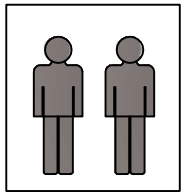

STEP 2