KARE DESIGN

82152 /82367/82368/82369 Coffee Table Bonsai Tre Brass

STEP 1

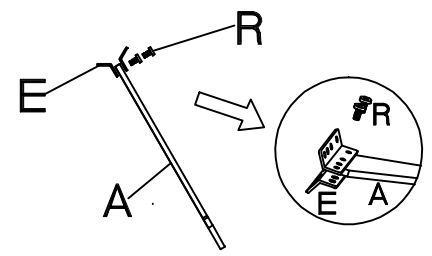

STEP 2

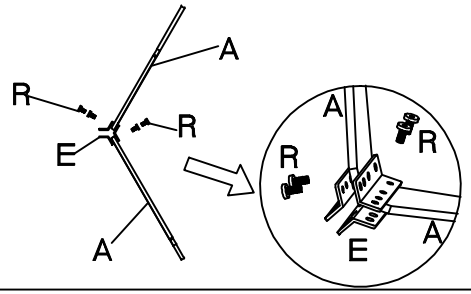

STEP 3

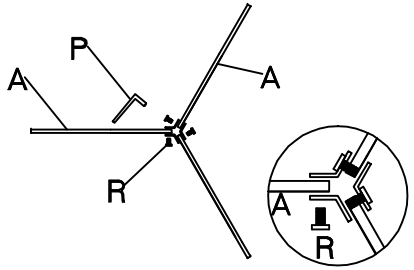

STEP 4

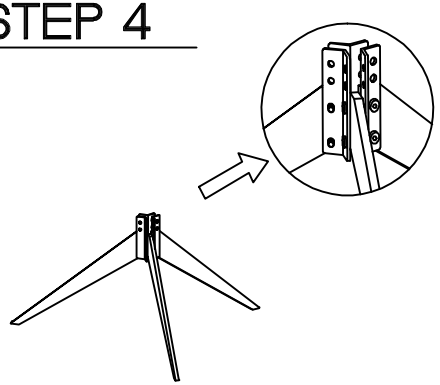

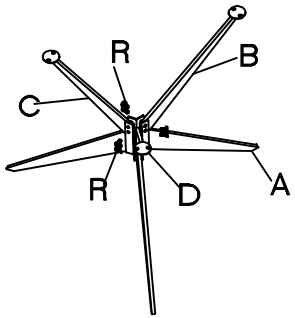

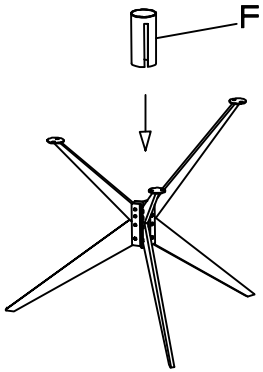

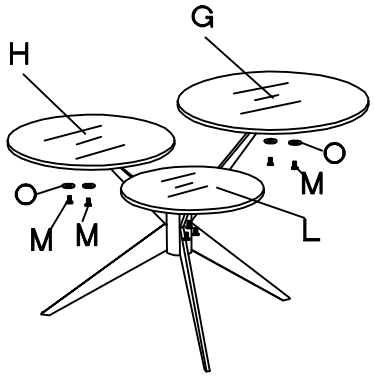

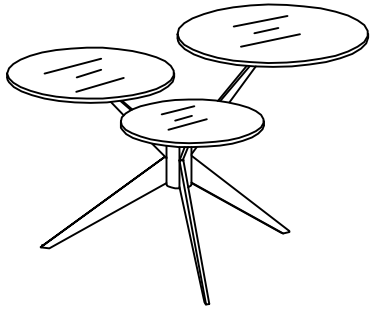

A	B	C	D	E	F	G	H	L	R	M	O	P
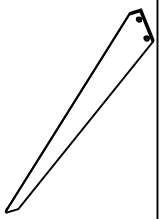	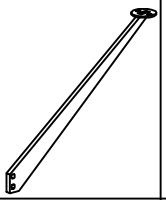											
3pcs	1PC	1PC	1PC	3PC	1PC	1PC	1PC	1PC	12PC	6PC	6PC	1PC

Remark:Do not tighten any screws until item is fully assembled!