82761 SINGLE ARMCHAIR

Step 1

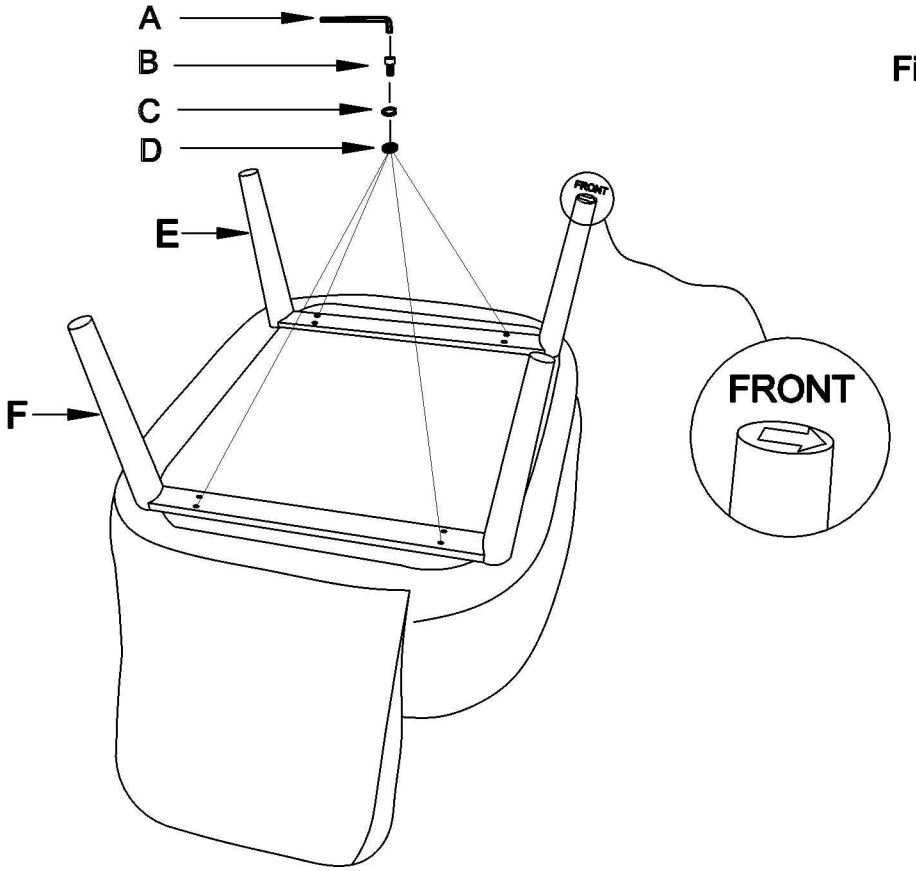

Finish

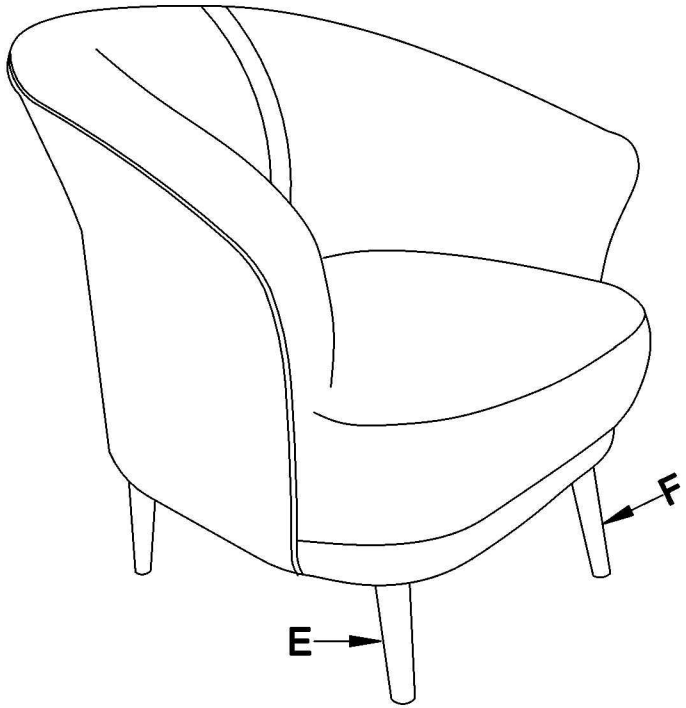

NO	A	B	C	D	E	F
TYPE					(LEFT LEG)	(RIGHT LEG)
QTE	1PC	8PCS	8PCS	8PCS	1PC	1PC