82905 – bench Farfalla Nature

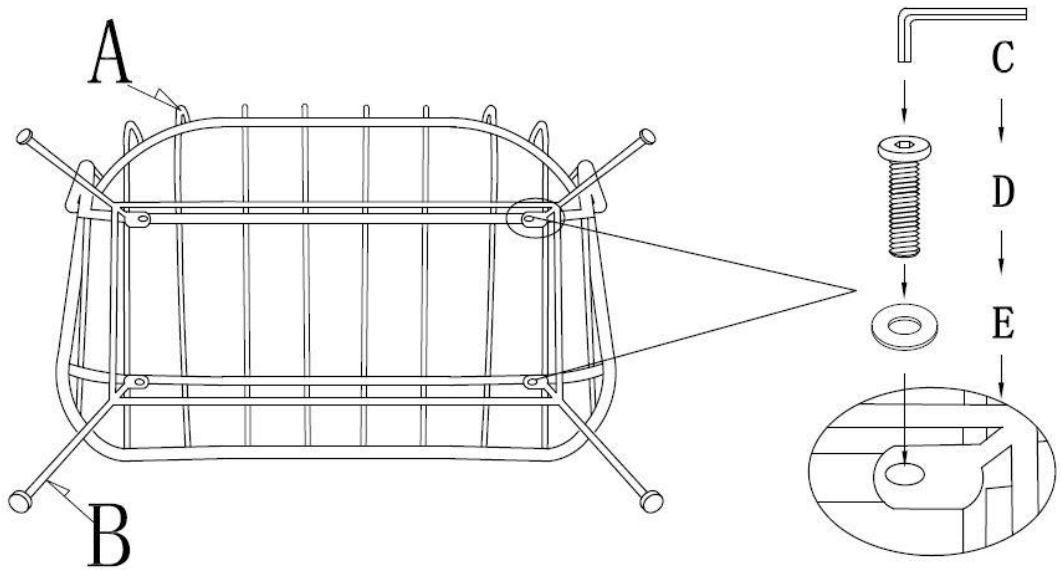

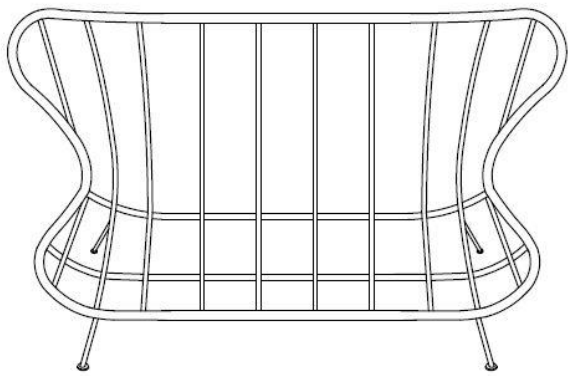

A	B	C	D	E
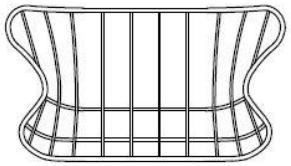	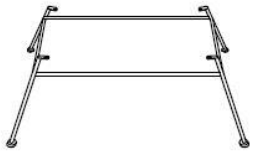			
1PC	1PC	1PC	4 PCS	4 PCS