84298: COFFEE TABLE Rule

KARE DESIGN

(1) * 1

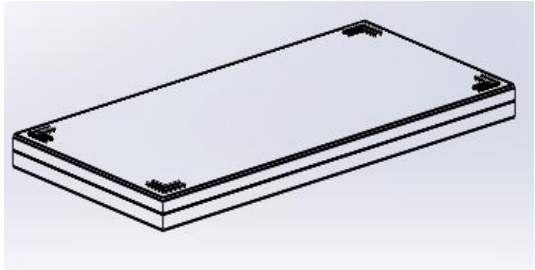

(2) * 1

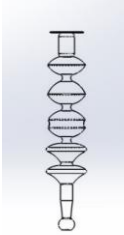

(3) * 1

(4) * 1

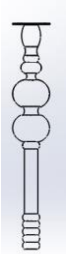

(5) * 1

(6) * 16

(7) * 16

(8) * 1

①

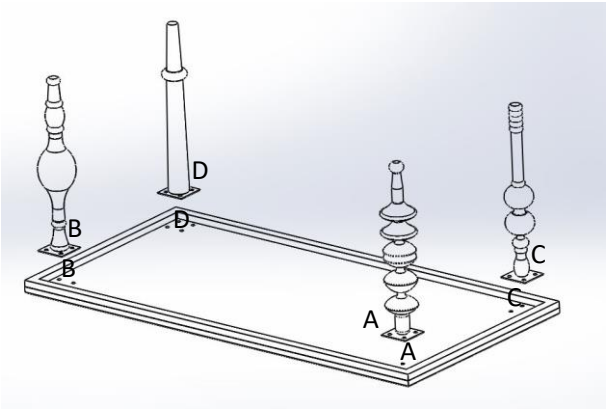

②

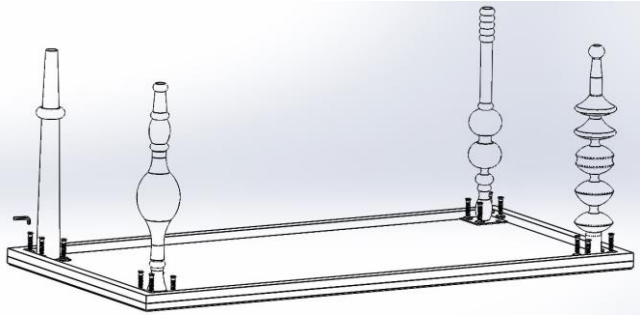
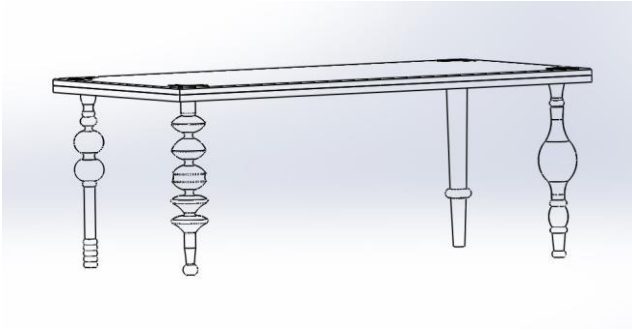
③