86291 Armchair Marylin Anthracite

KARE DESIGN

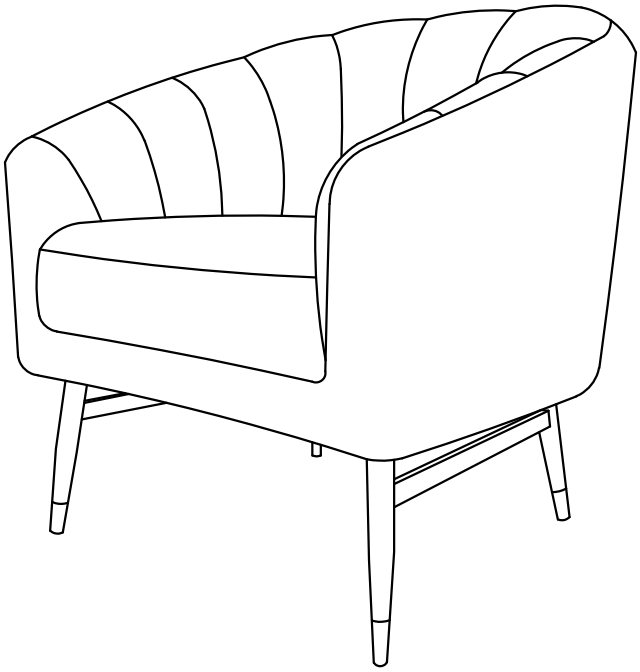

(1) x1	
(2) x1	
(3) x1	
(4) x1	
(5) x2	M6*10mm
(6) x18	
(7) x18	
(8) x1	5*65mm
(9) x16	M6*20mm

Step 1

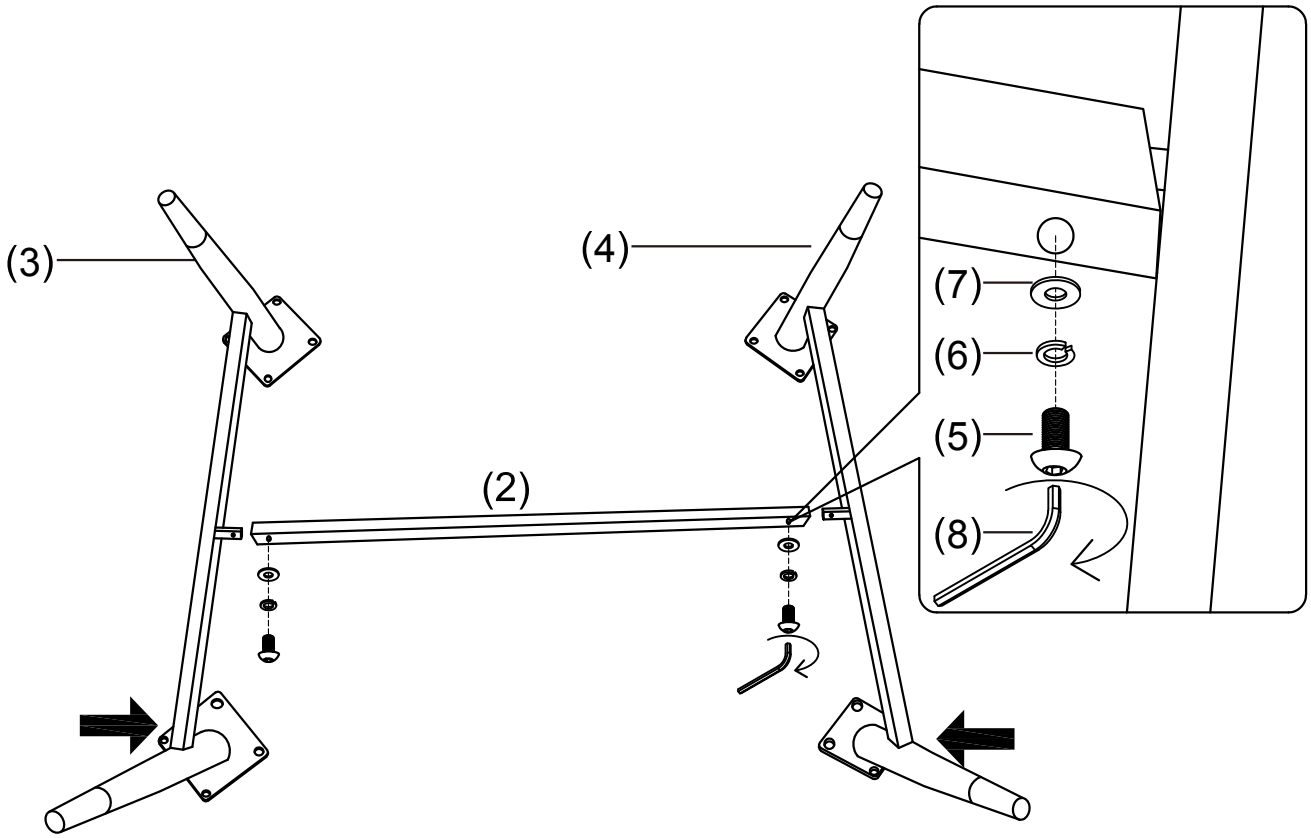

86291 Armchair Marylin Anthracite

KARE DESIGN

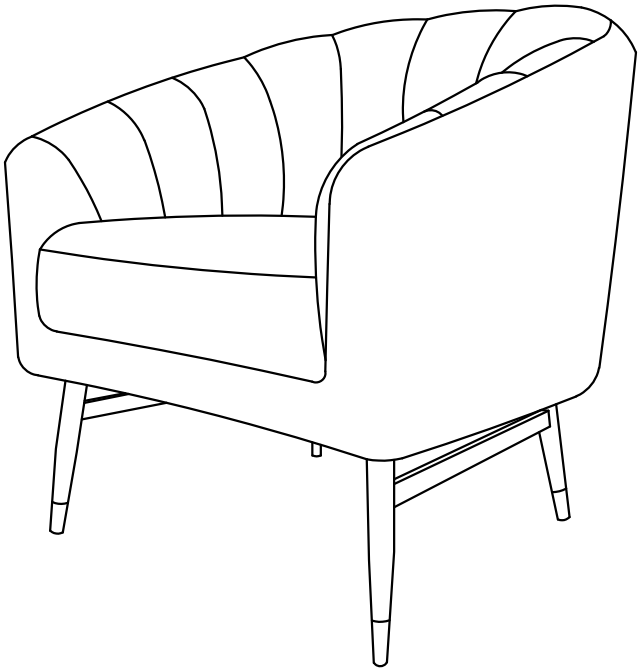

(1) x1	
(2) x1	
(3) x1	
(4) x1	
(5) x2	M6*10mm
(6) x18	
(7) x18	
(8) x1	5*65mm
(9) x16	M6*20mm
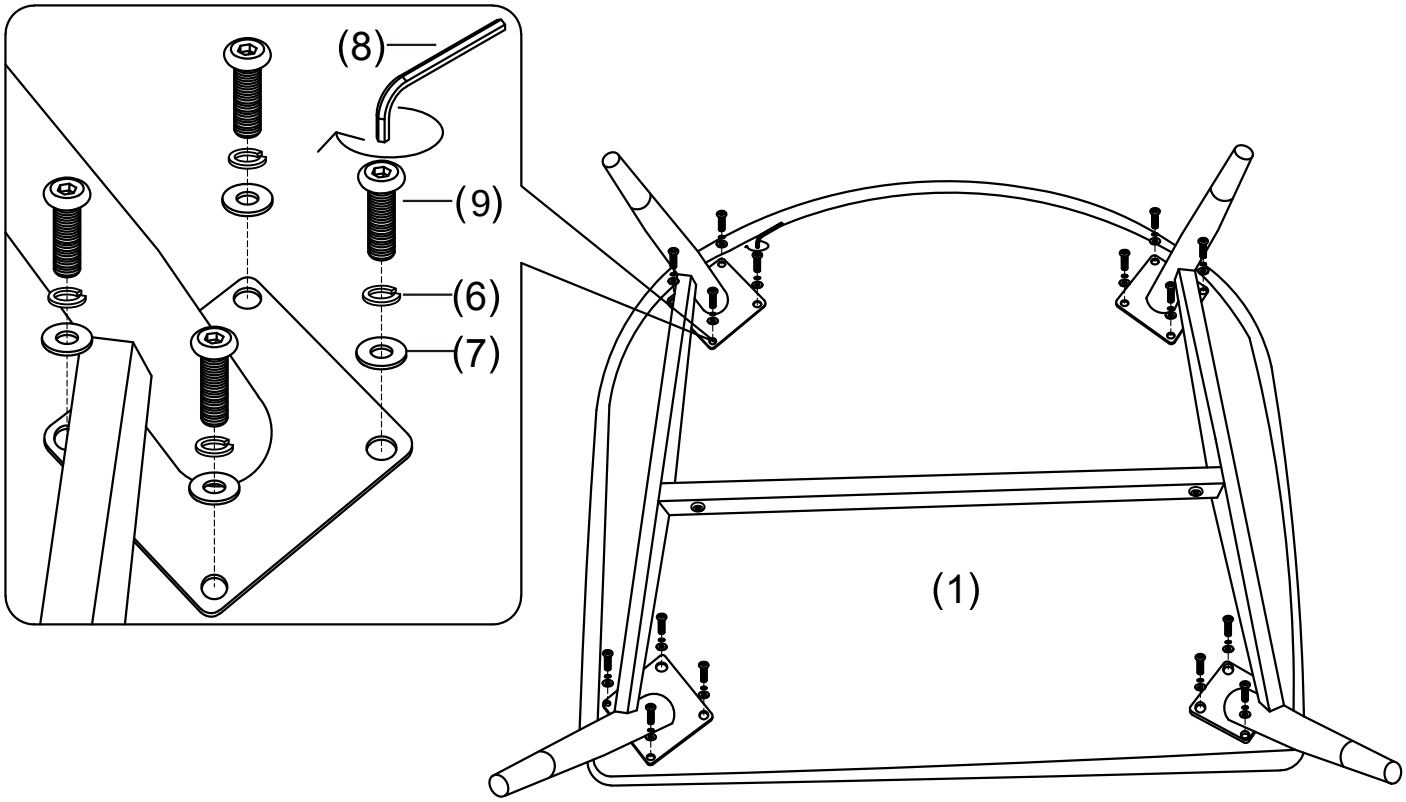
Step 2